REV.	DESCRIPTION OF CHANGE	INITIALS	DATE
0	INITIAL ISSUE		
1	ADD BRACKET (ITEM 3), ADD CAP (ITEM 4), ADD SHEET 2	BJC	29/11/2012
2	TITLE BLOCK UPDATED; CAP (04) UPDATED	BJC	22/07/2014

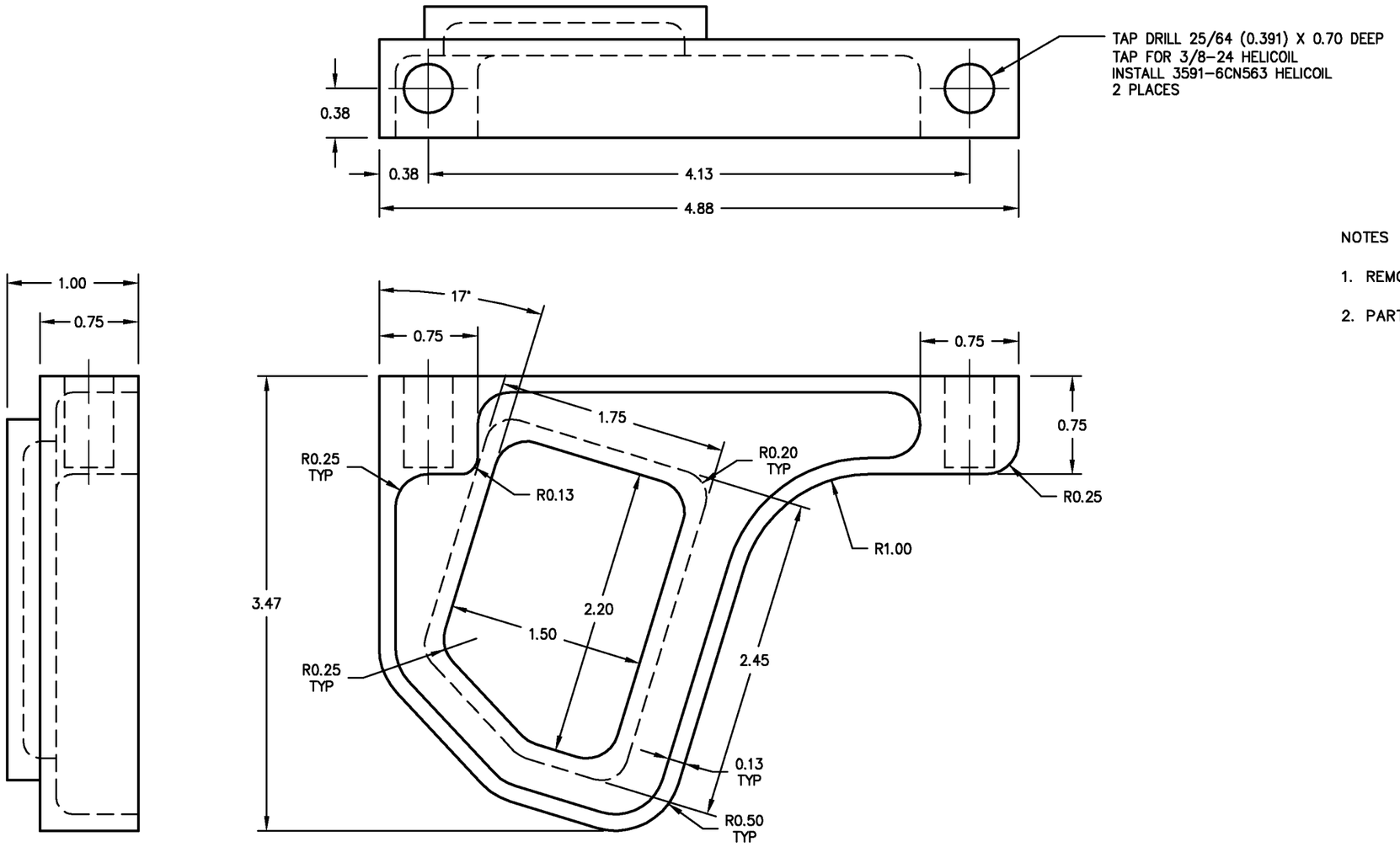

NOTES

1. REMOVE ALL BURRS AND BREAK SHARP EDGES.
2. PART IS TO BE CNC MACHINED USING DRAWING AS A TEMPLATE.

(01) STEP END (LEFT)

(02) STEP END (RIGHT)

LEFT (01) SHOWN, RIGHT (02) OPPOSITE
SEE NOTE 2

02 QTY	01 QTY	PART NO.	ITEM	DESCRIPTION	MATERIAL	MATERIAL SPEC	STOCK SIZE
2	2	3591-6CN563		SELF LOCKING HELICOIL			
		82720-02	02	STEP END (RIGHT)	6061-T6 ALUMINUM	QQ-A-200/8	3.5 X 1 BAR
		82720-01	01	STEP END (LEFT)	6061-T6 ALUMINUM	QQ-A-200/8	3.5 X 1 BAR

LIST OF MATERIALS

— NOTICE —
THIS DRAWING CONTAINS INFORMATION AND DATA WHICH IS PROPRIETARY TO AERO DESIGN LTD. THIS DRAWING, OR ANY PORTION THEREOF, MAY NOT BE REPRODUCED, COPIED, OR DUPLICATED IN ANY MANNER, NOR USED FOR MANUFACTURING WITHOUT THE WRITTEN CONSENT OF AERO DESIGN LTD. BY ACCEPTING THIS DRAWING FOR REFERENCE, THE RECIPIENT AGREES TO HOLD AERO DESIGN LTD. HARMLESS FROM THE USE, OR MISUSE, OF THIS DRAWING OR THE INFORMATION CONTAINED THEREON.

APPROVALS		DATE
DRAWN:	JEFF CLARKE	10 JULY 2008
CHECKED:	E. BURGOIN	

UNLESS OTHERWISE SPECIFIED DIMENSIONS ARE IN INCHES.
TOLERANCES ON:

DECIMALS		ANGLES
X.XXX	±0.010	±1/2°
X.XX	±0.03	
X.X	±0.1	

AERO DESIGN LTD.
9888A MALASPINA ROAD
POWELL RIVER, BC, CANADA, V8A 0G3
TEL: 604.483.2376 www.aerodesign.ca

EUROCOPTER AS350 & AS355 SERIES
QUICK RELEASE STEP INSTALLATION
STEP BRACKET FABRICATION

SCALE 1 : 1	DWG. SIZE	DWG. NO.	REV.
SHEET 1 OF 2	A3	82720	2

REV.	DESCRIPTION OF CHANGE	INITIALS	DATE
0	INITIAL ISSUE		
1	ADD BRACKET (ITEM 3), ADD CAP (ITEM 4), ADD SHEET 2	BJC	29/11/2012
2	TITLE BLOCK UPDATED; CAP (04) UPDATED	BJC	22/07/2014

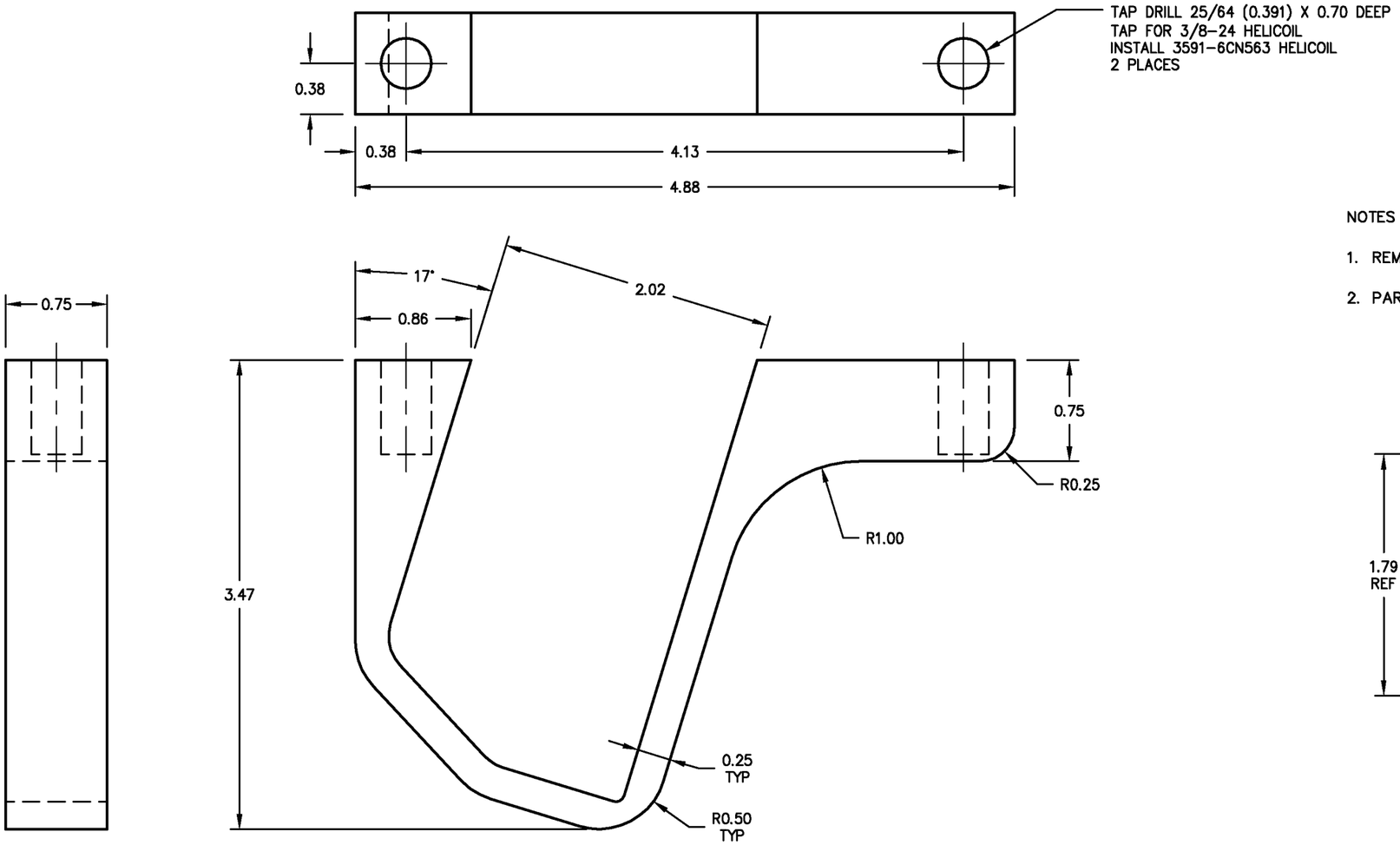

NOTES

1. REMOVE ALL BURRS AND BREAK SHARP EDGES.
2. PART IS TO BE CNC MACHINED USING DRAWING AS A TEMPLATE.

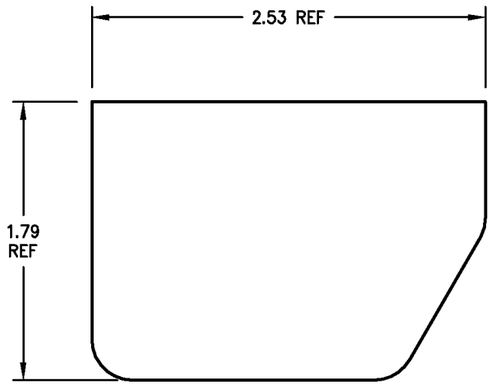

(04) END CAP

PROFILE TO FIT 0.05 SMALLER
THAN OUTSIDE OF EXTRUSION 78230

(03) STEP BRACKET

SEE NOTE 2

04	03	PART NO.	ITEM	DESCRIPTION	MATERIAL	MATERIAL SPEC	STOCK SIZE
	2	3591-6CN563		SELF LOCKING HELICOIL			
		82720-04	04	END CAP	6061-T6 ALUMINUM	QQ-A-250/11	0.125 SHEET
		82720-03	03	STEP BRACKET	6061-T6 ALUMINUM	QQ-A-200/8	3.5 X 1 BAR

QTY QTY — LIST OF MATERIALS

--- NOTICE ---
THIS DRAWING CONTAINS INFORMATION AND DATA WHICH IS PROPRIETARY TO AERO DESIGN LTD. THIS DRAWING, OR ANY PORTION THEREOF, MAY NOT BE REPRODUCED, COPIED, OR DUPLICATED IN ANY MANNER, NOR USED FOR MANUFACTURING WITHOUT THE WRITTEN CONSENT OF AERO DESIGN LTD. BY ACCEPTING THIS DRAWING FOR REFERENCE, THE RECIPIENT AGREES TO HOLD AERO DESIGN LTD. HARMLESS FROM THE USE, OR MISUSE, OF THIS DRAWING OR THE INFORMATION CONTAINED THEREON.

APPROVALS		DATE
DRAWN:	JEFF CLARKE	10 JULY 2008
CHECKED:	E. BURGOIN	

UNLESS OTHERWISE SPECIFIED
DIMENSIONS ARE IN INCHES.
TOLERANCES ON:

DECIMALS		ANGLES
X.XXX	±0.010	±1/2°
X.XX	±0.03	
X.X	±0.1	

AERO DESIGN LTD.
9888A MALASPINA ROAD
POWELL RIVER, BC, CANADA, V8A 0G3
TEL: 604.483.2376 www.aerodesign.ca

EUROCOPTER AS350 & AS355 SERIES QUICK RELEASE STEP INSTALLATION STEP BRACKET FABRICATION

SCALE 1 : 1	DWG. SIZE	DWG. NO.	REV.
SHEET 2 OF 2	A3	82720	2